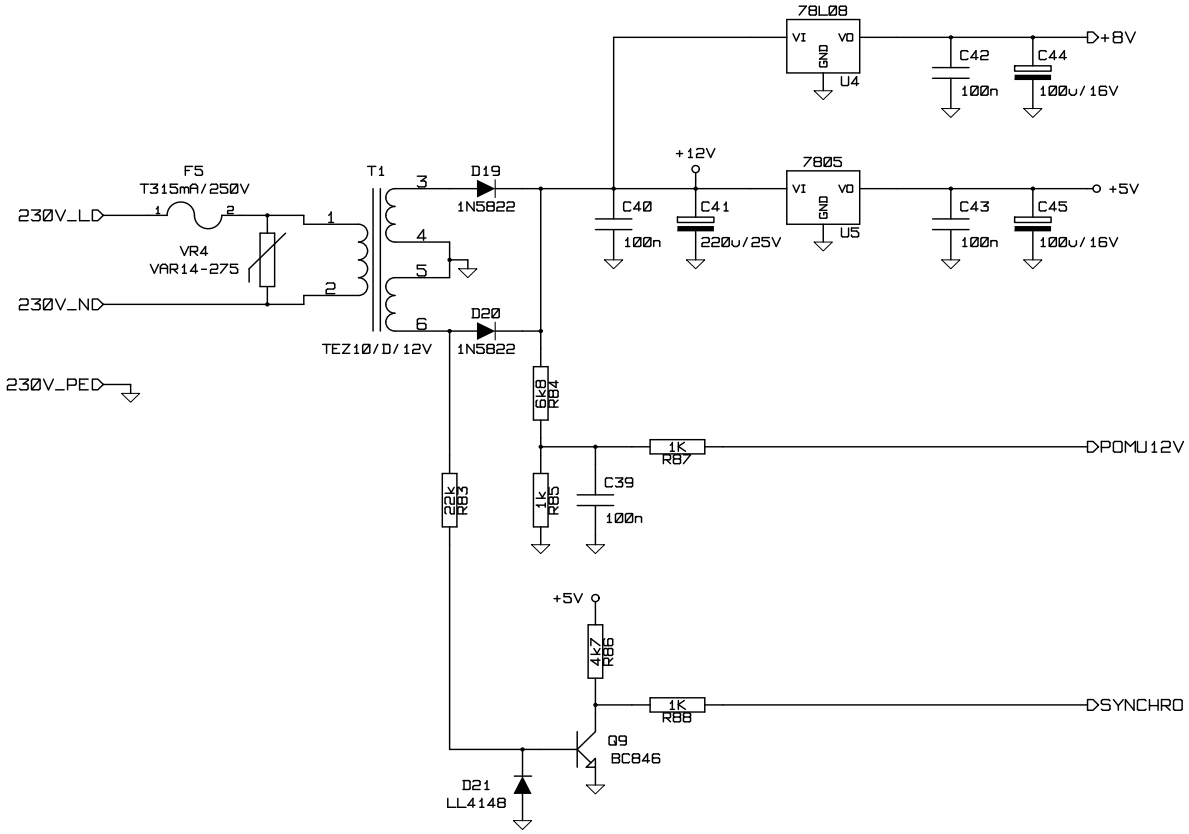


| | | |
|---|---|---|
| K&K | | |
| Title: Dome Control Module - Zasilanie | | |
| Size: A4 | Date: 6 jun 2008 | Rev: 0.91 |
| KiCad E.D.A. | | Sheet: 7/7 |